TOORS
DOOR SYSTEMS

Installation manual EN
Two-wing door
Installation INTO the building opening
REV1006

A

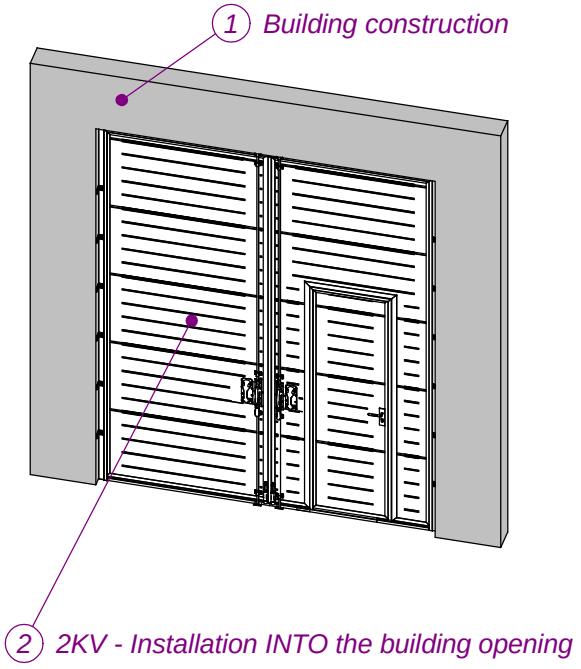

B

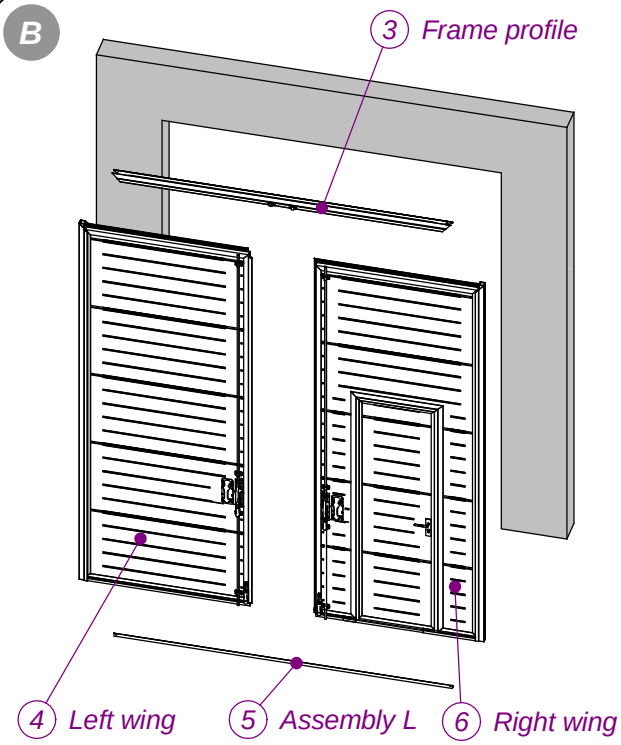

C List of necessary tools

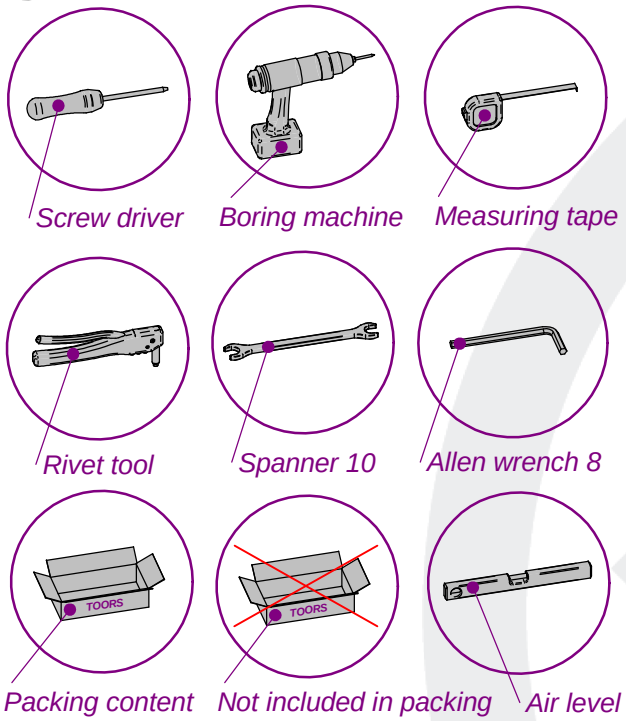

D

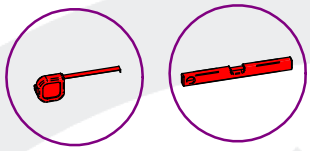

TOORS
W_TOORS
x
H_TOORS

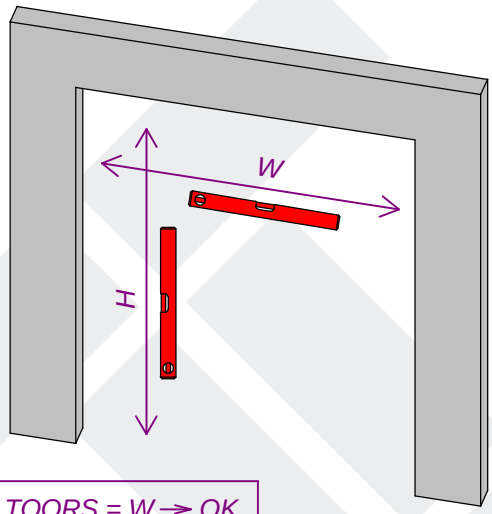

W_TOORS = W → OK
H_TOORS = H → OK

TOORS CZ s.r.o, Turkova 1338, 504 01 Nový Bydžov, Czech Republic
Tel.: +420 495 491 855, fax: +420 498 606 714, e-mail: toors@toors.cz

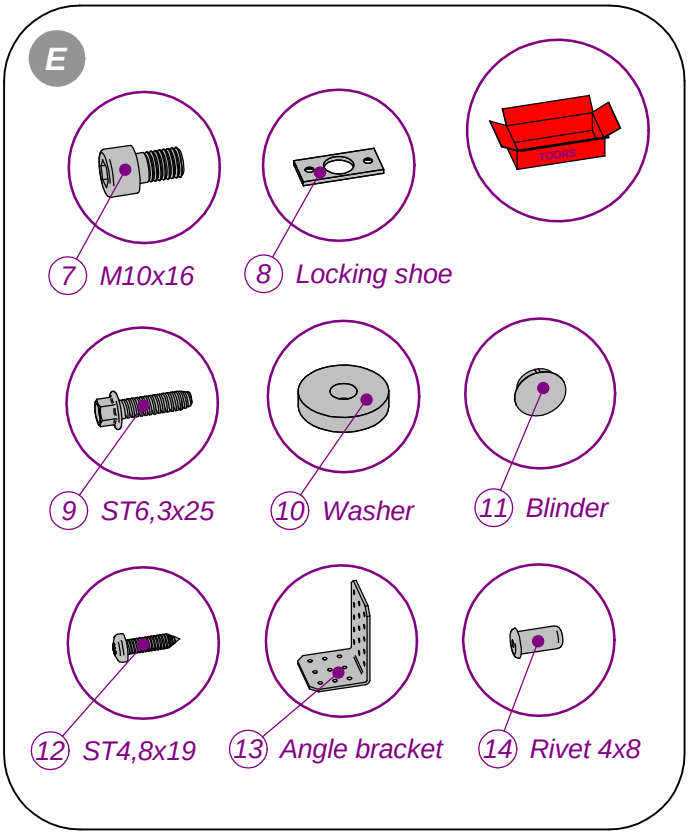
E
7 M10x16
8 Locking shoe
9 ST6,3x25
10 Washer
11 Blinder
12 ST4,8x19
13 Angle bracket
14 Rivet 4x8

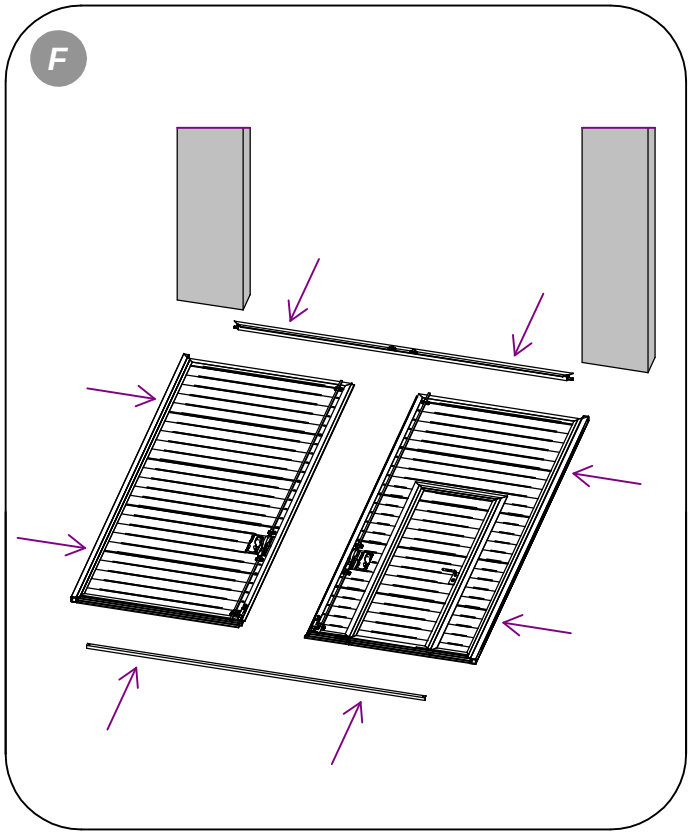
F

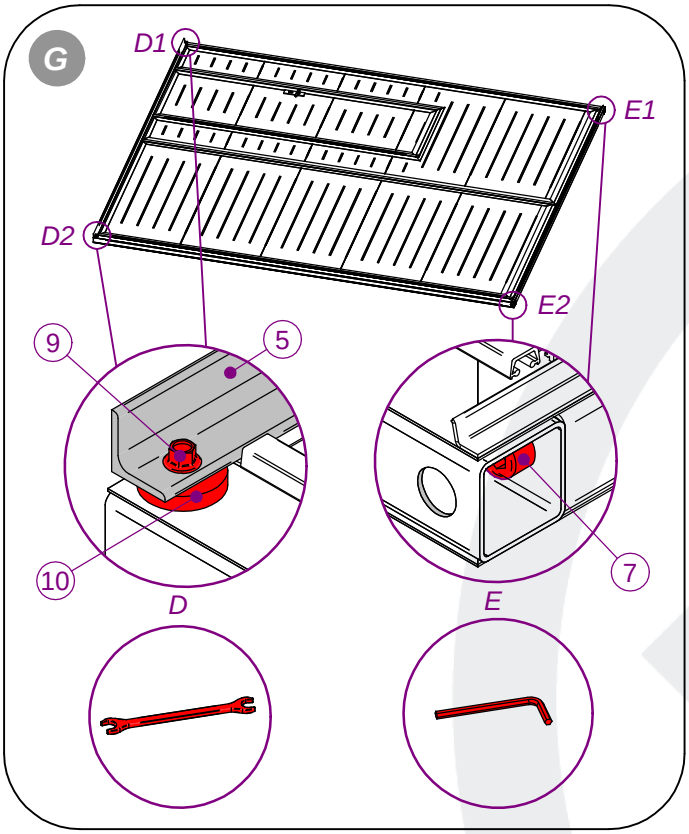
G
D1
E1
D2
E2
9
5
10
D
E
7

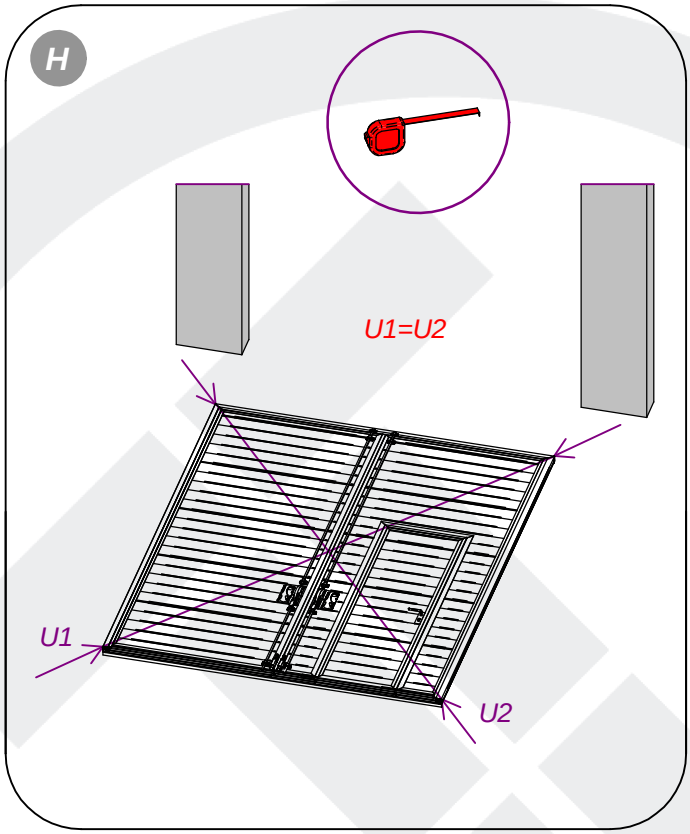
H
U1=U2
U1
U2

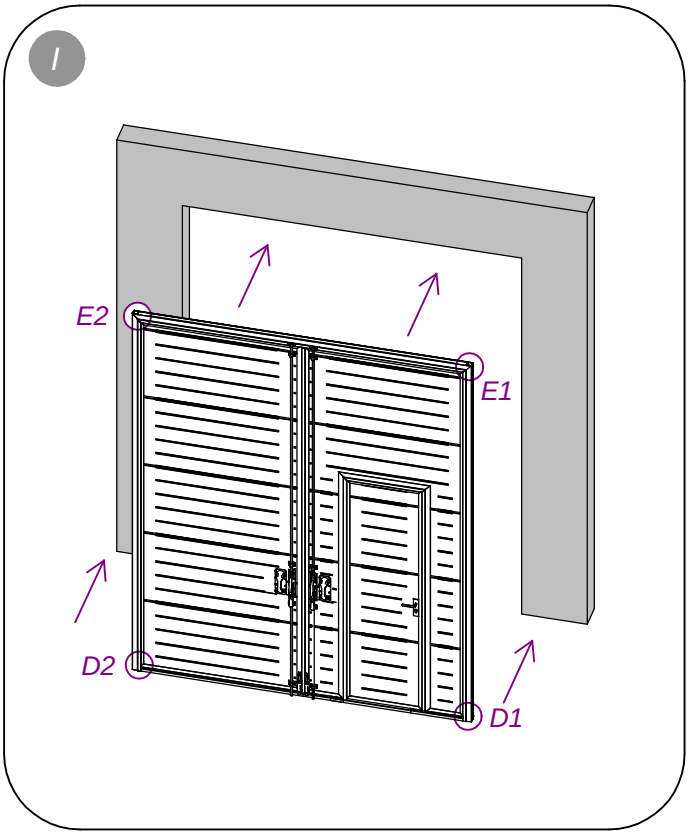
I
E2
E1
D2
D1

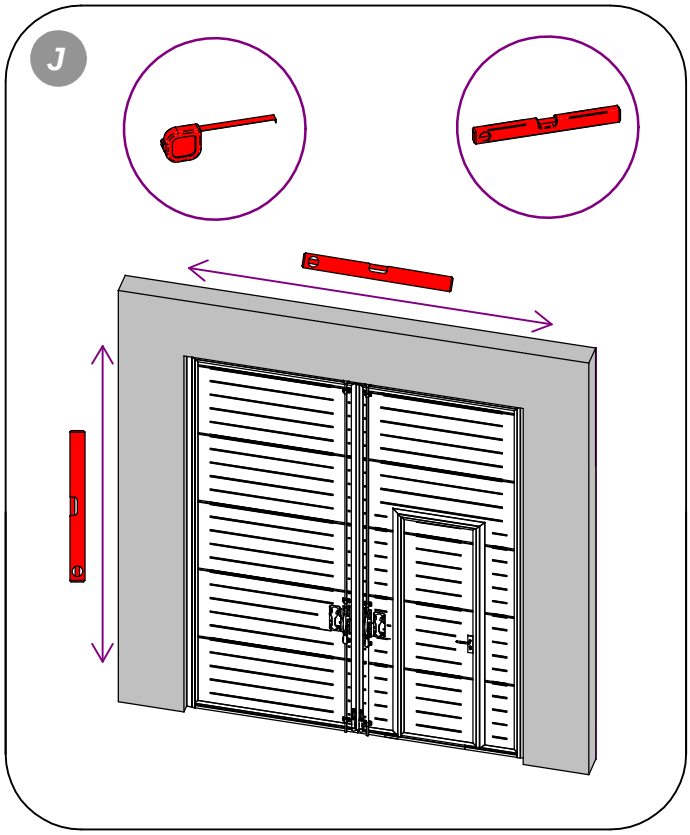
J

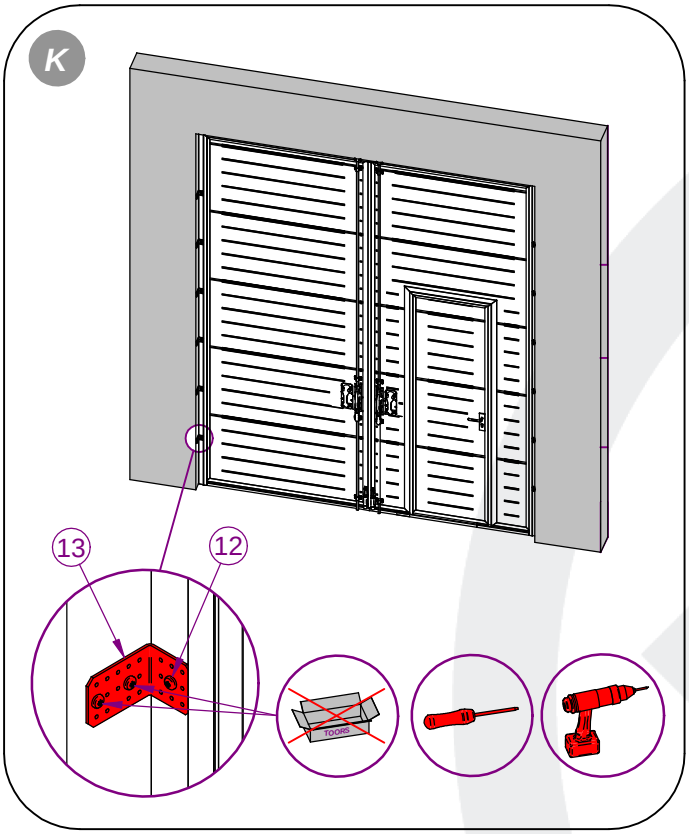
K
13
12

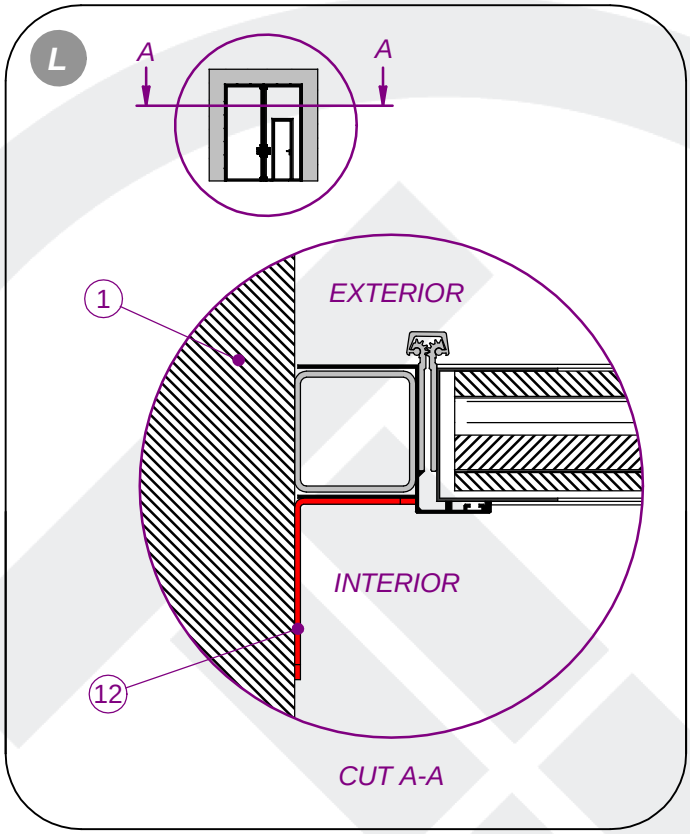
L
A
A
1
EXTERIOR
INTERIOR
12
CUT A-A

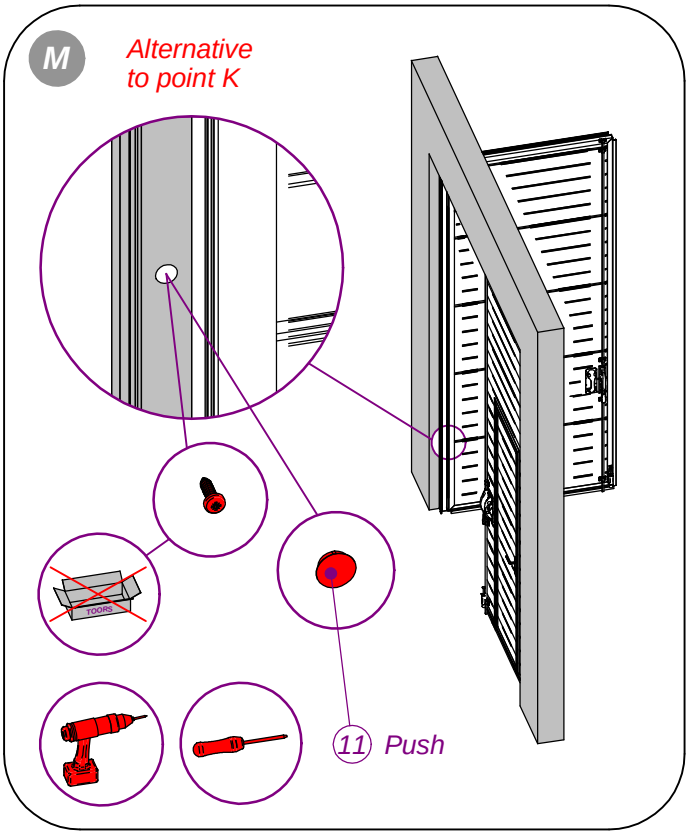

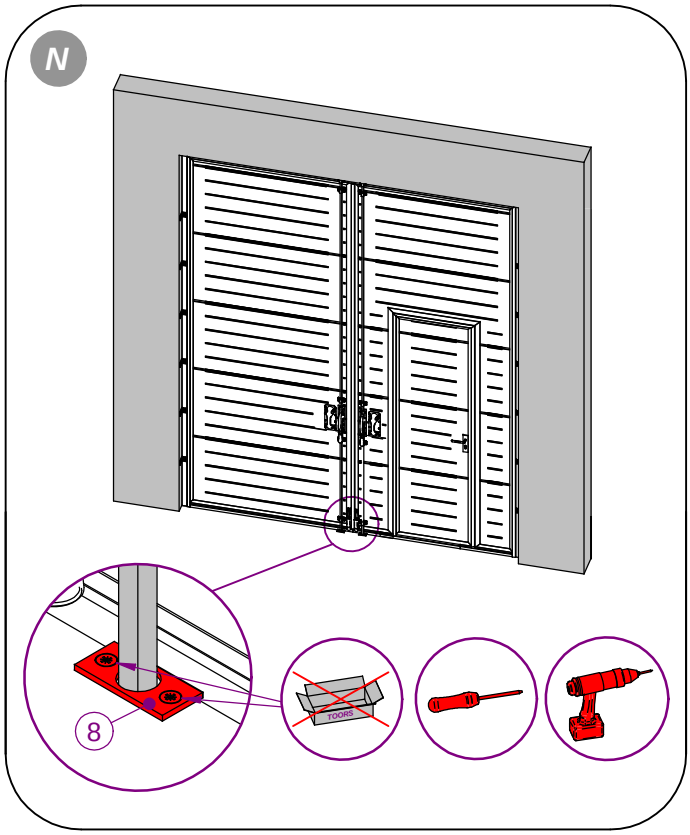

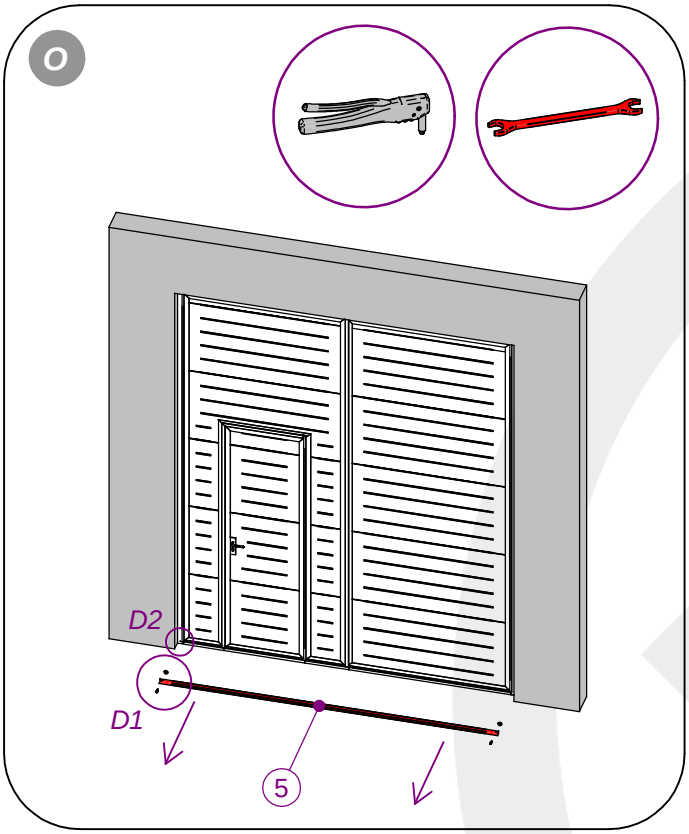

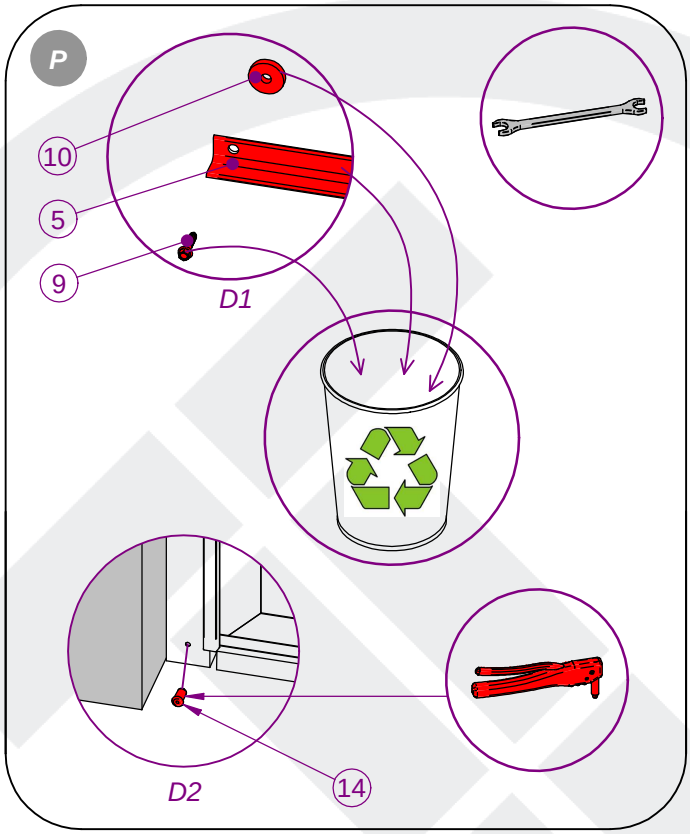

TOORS CZ s.r.o, Turkova 1338, 504 01 Nový Bydžov, Czech Republic
Tel.: +420 495 491 855, fax: +420 498 606 714, e-mail: toors@toors.cz
www.toors.cz